rn m r b ut ns mi™, p s visit ur w bsit t
www. ns mi.c m

ON Semiconductor®

FMS6141
Low-Cost, Single-Channel 4th-Order Standard Definition Video Filter Driver

Features

- Single 4th-Order 8 MHz (SD) Filter
- Drives Single, AC- or DC-coupled, Video Loads ($2\ V_{pp}$, 150 Ω)
- Drives Dual, AC- or DC-coupled, Video Loads ($2V_{pp}$, 75Ω)
- Transparent Input Clamping
- AC- or DC-Coupled Input
- AC- or DC-Coupled Output
- DC-Coupled Output Eliminates AC-Coupling Capacitors
- Single Supply
- Robust 8 kV ESD Protection
- Lead-Free Packages: SOIC-8 or SC70-5

Applications

- Cable Set-Top Boxes
- Satellite Set-Top Boxes
- DVD Players
- HDTVs
- Personal Video Recorders (PVR)
- Video On Demand (VOD)

Description

The FMS6141 Low-Cost Video Filter is intended to replace passive LC filters and drivers with a low-cost integrated device. The 4th-order filter provides improved image quality compared to typical 2nd or 3rd-order passive solutions.

The FMS6141 may be directly driven by a DC-coupled DAC output or an AC-coupled signal. Internal diode clamps and bias circuitry may be used if an AC-coupled input is required *(see Application Information for details).*

The FMS6141's output can drive an AC- or DC-coupled single (150 Ω) or dual (75 Ω) load. DC-coupling the output removes the need for output coupling capacitors. The input DC level is offset approximately +280 mV at the output (*see Application Information for details).*

Related Applications Notes

-

August-2024, Rev. 3

Publication Order Number:
FMS6141/D

Ordering Information

Part Number	Operating Temperature Range	Package	Packing Method
FMS6141CSX	-40°C to +85°C	8-Lead, Small Outline Integrated Circuit (SOIC)	Tape and Reel
FMS6141S5X	-40°C to +85°C	5- Lead SC70 Package	Tape and Reel

Pin Configurations

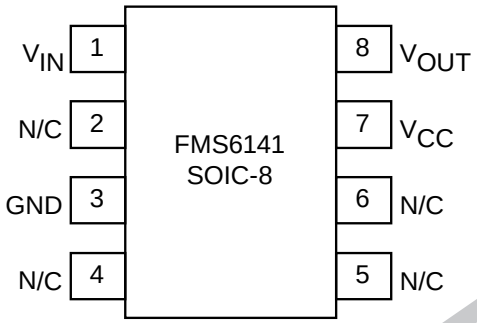

Figure 2. SOIC-8

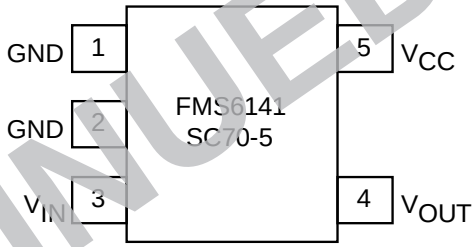

Figure 3. SC70

Pin Definitions

SOIC Pin #	SC70 Pin#	Name	Description
1	3	V_{IN}	Video Input
2		N/C	No Connect
3	1, 2	GND	Must Be Connected to Ground
4		N/C	No Connect
5		N/C	No Connect
6		N/C	No Connect
7	5	V_{CC}	+5V Supply, Do Not Float
8	4	V_{OUT}	Filtered Video Output

Absolute Maximum Ratings

Stresses exceeding the absolute maximum ratings may damage the device. The device may not function or be operable above the recommended operating conditions and stressing the parts to these levels is not recommended. In addition, extended exposure to stresses above the recommended operating conditions may affect device reliability. The absolute maximum ratings are stress ratings only.

Symbol	Parameter	Min.	Max.	Unit
V_{CC}	DC Supply Voltage	-0.3	6.0	V
V_{IO}	Analog and Digital I/O	-0.3	V_{CC} +0.3	V
I_{OUT}	Output Current, Do Not Exceed		50	mA

Recommended Operating Conditions

Symbol	Parameter	Min.	Typ.	Max.	Unit
T_A	Operating Temperature Range	-40		85	°C
V_{CC}	V_{CC} Range	4.75	5.00	5.25	V

ESD Information

Symbol	Parameter	Value	Unit
ESD	Human Body Model, JESD22-A114	8.0	kV

DC Specifications

T_A = 25°C, V_{CC} = 5.0 V, R_S = 37.5 Ω; input is AC coupled with 0.1 µF; output is AC coupled with 220 µF into a 150 Ω load; unless otherwise noted.

Symbol	Parameter	Conditions	Min.	Typ.	Max.	Unit
I_{CC}	Supply Current[1]	No Load		7	12	mA

Physical Dimensions

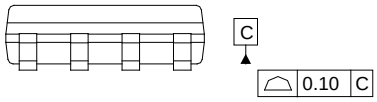

LAND PATTERN RECOMMENDATION

SEE DETAIL A

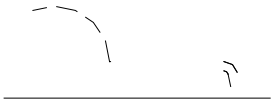

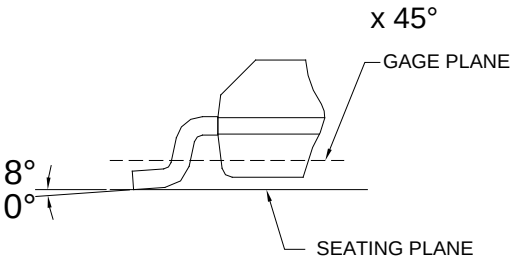

NOTES: UNLESS OTHERWISE SPECIFIED

A) THIS PACKAGE CONFORMS TO JEDEC MS-012, VARIATION AA, ISSUE C,
B) ALL DIMENSIONS ARE IN MILLIMETERS.
C) DIMENSIONS DO NOT INCLUDE MOLD FLASH OR BURRS.
D) LANDPATTERN STANDARD: SOIC127P600X175-8M.
E) DRAWING FILENAME: M08AREV13